OUTDOOR

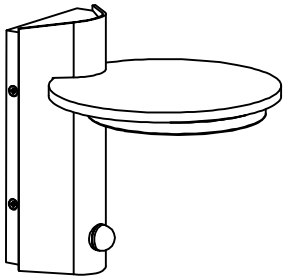

You will need

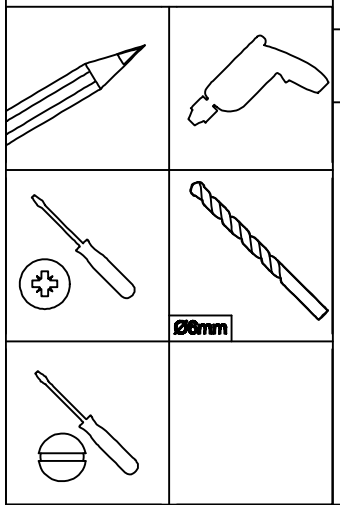

1

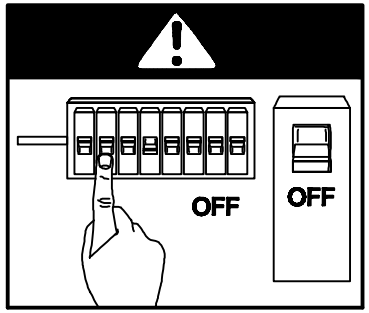

2

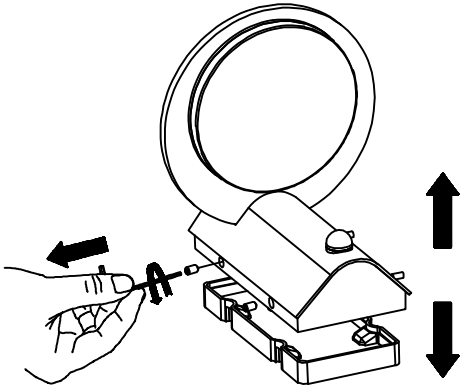

3

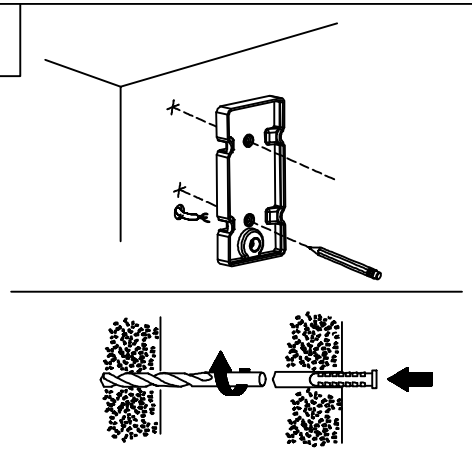

4

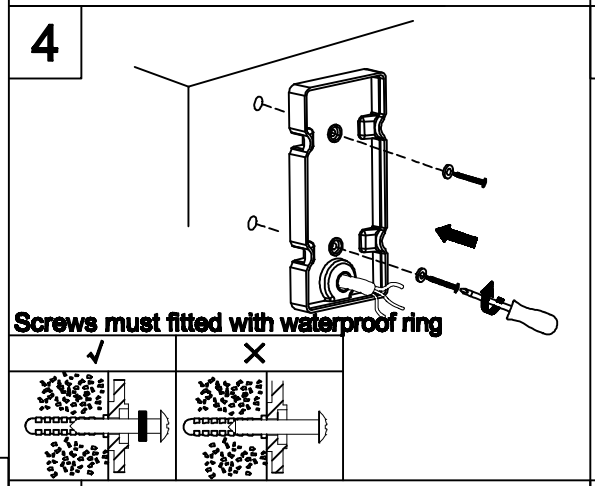

5

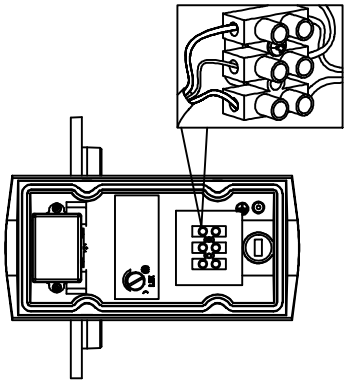

6

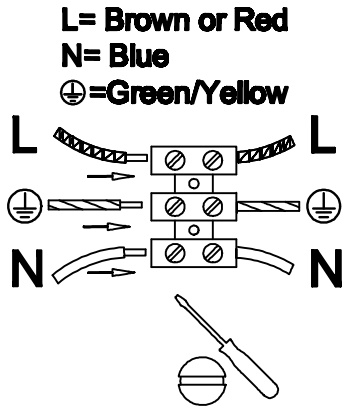

7

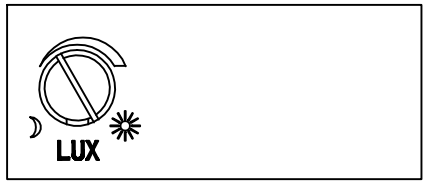

8

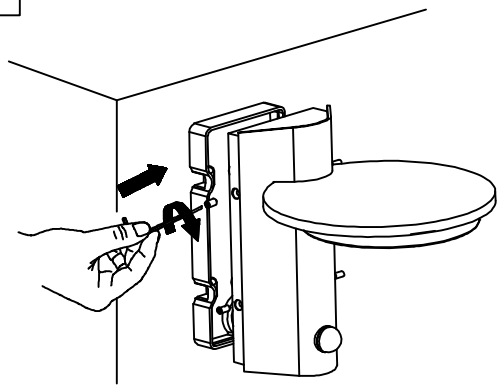
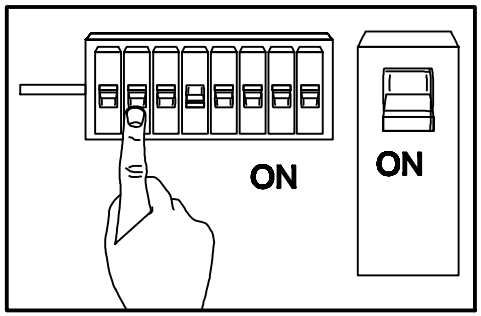
9