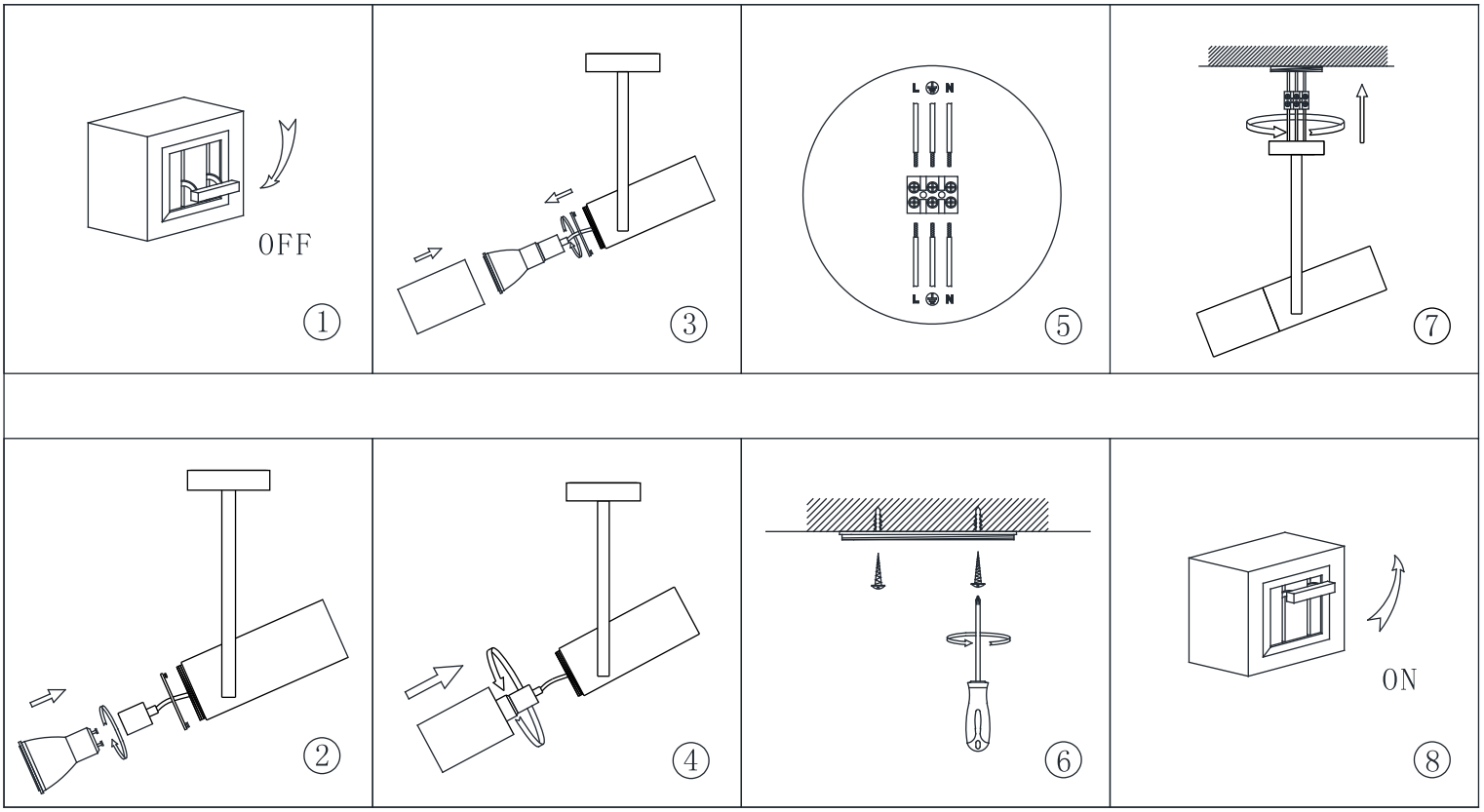
OFF
①
③
L N
L N
⑤
⑦
②
④
⑥
ON
⑧