Tata Coffee Table Natural

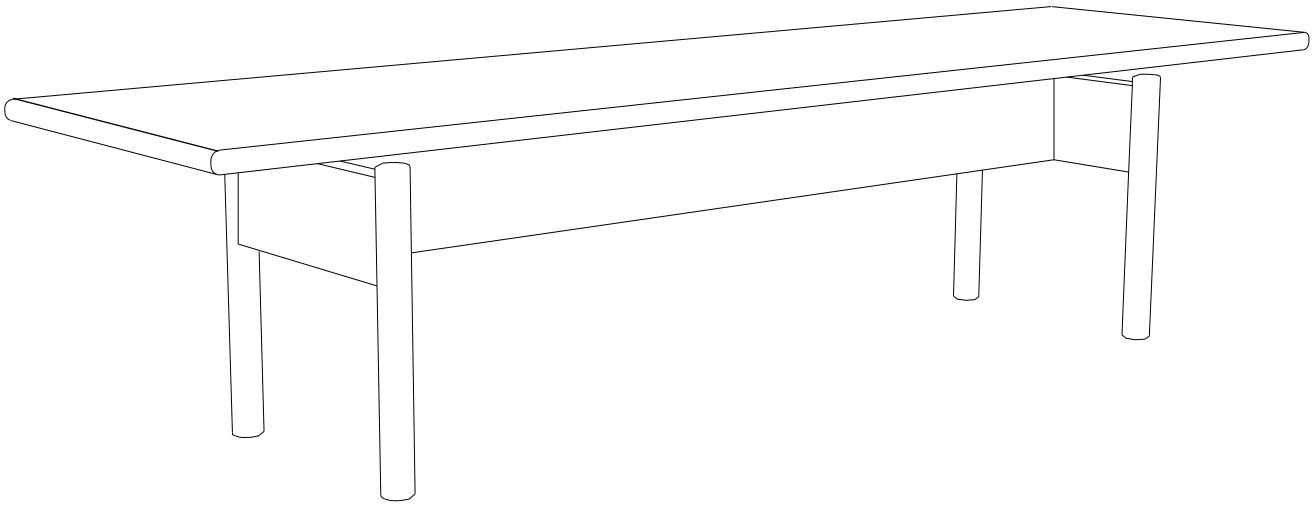

Hübsch

DANISH HOME INTERIOR & DESIGN

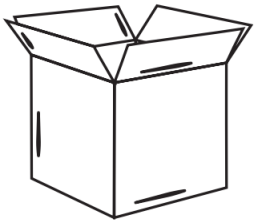



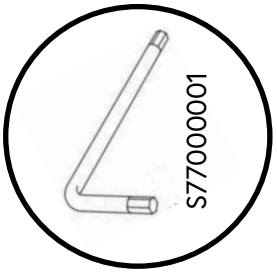

1x

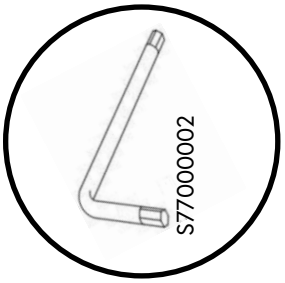

1x

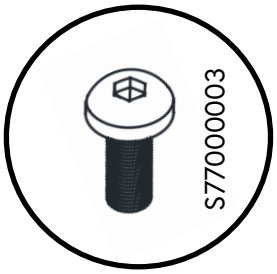

6x

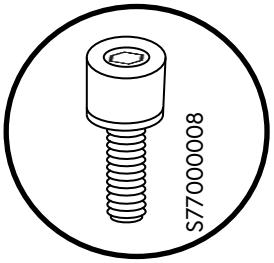

4x

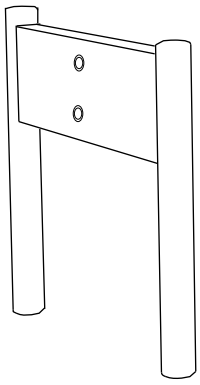

x2

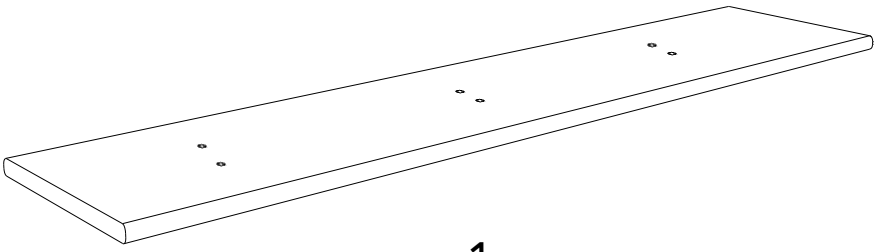

x1

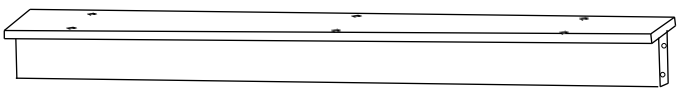

x1

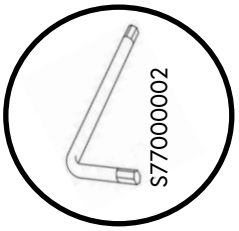

1x

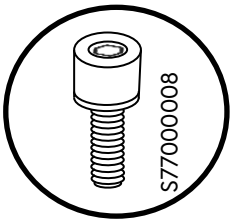

4x

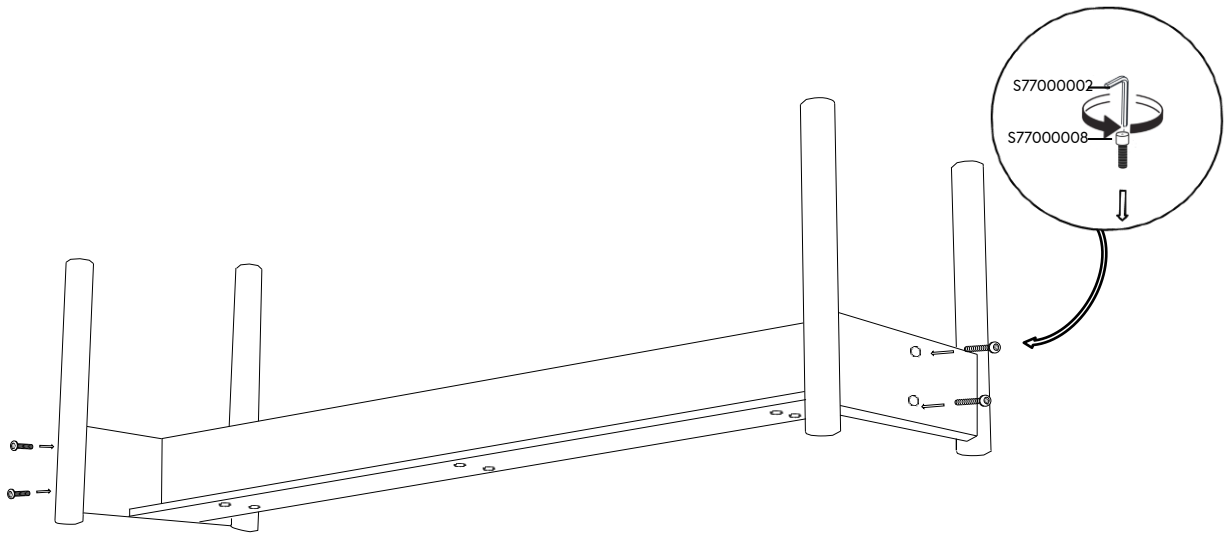

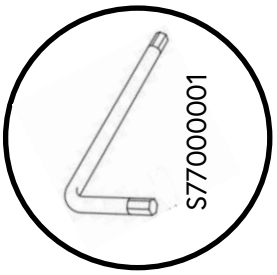

1x

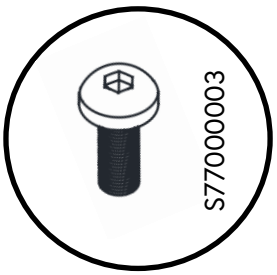

6x

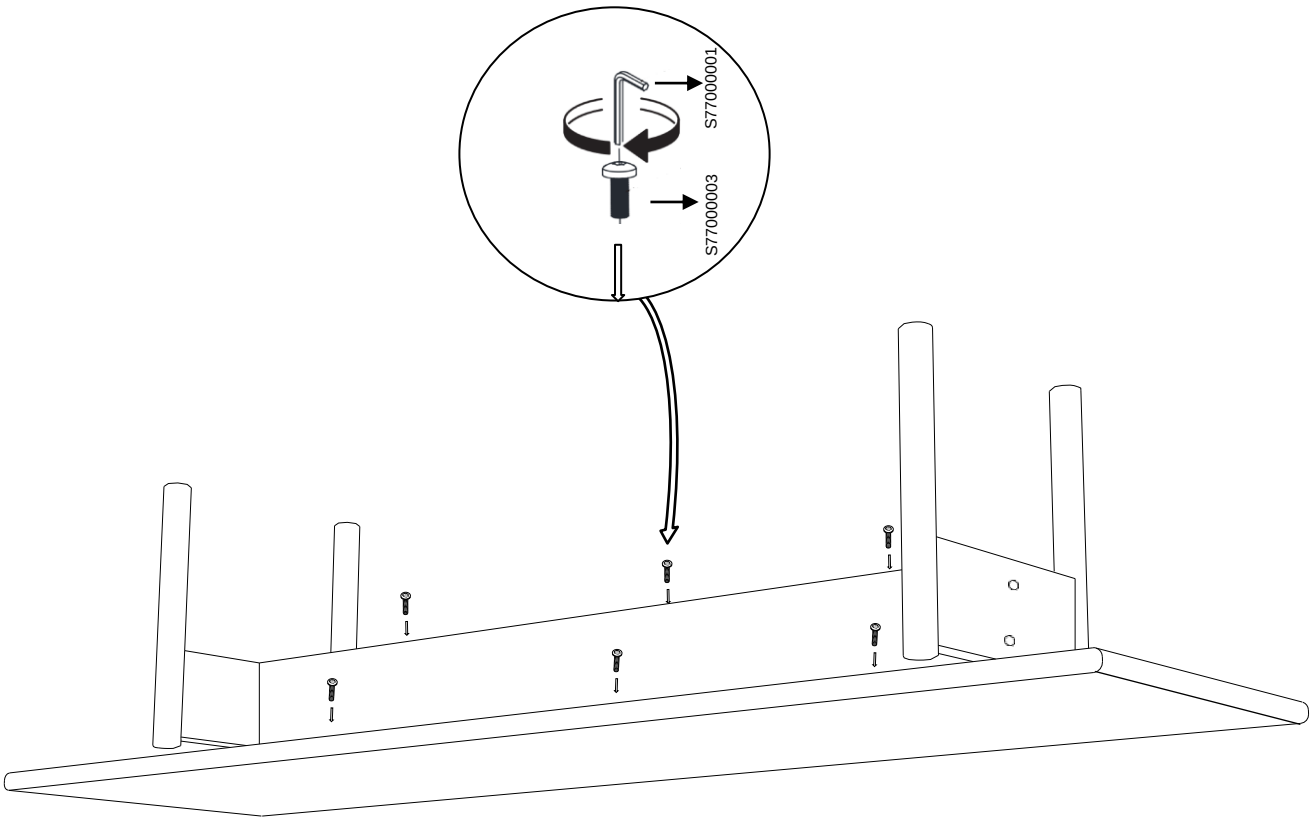

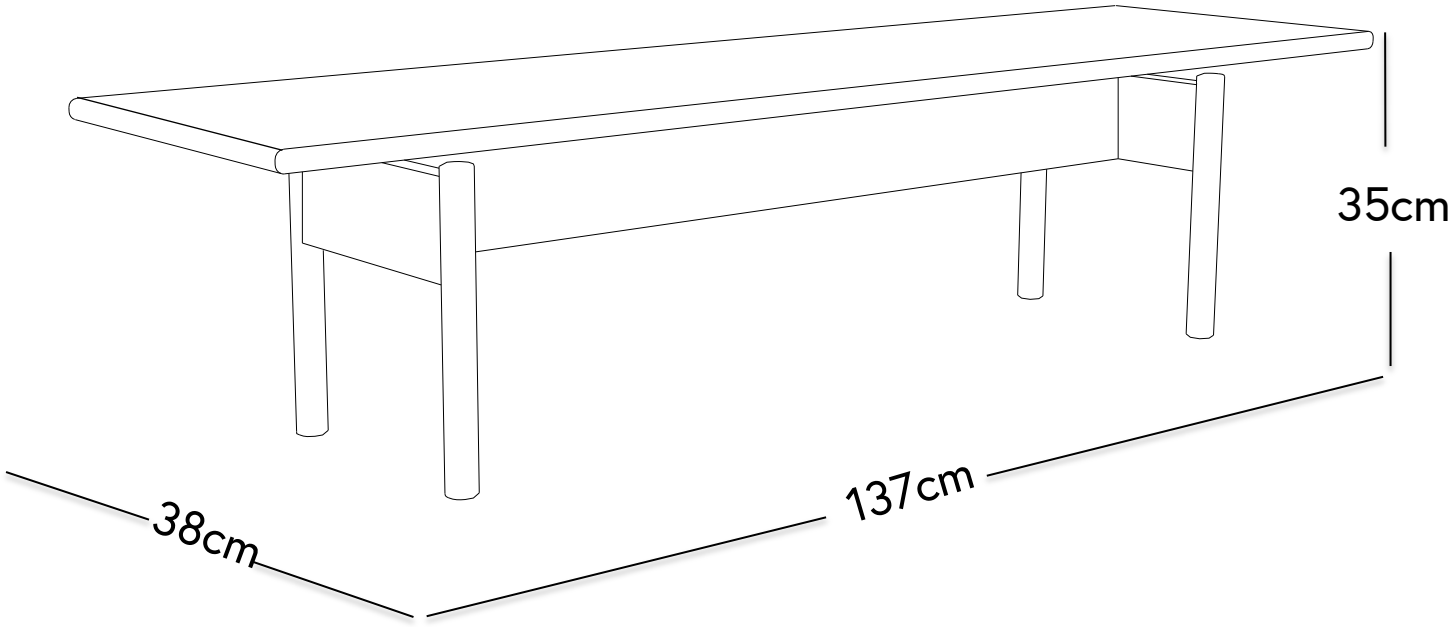
35cm
38cm
137cm

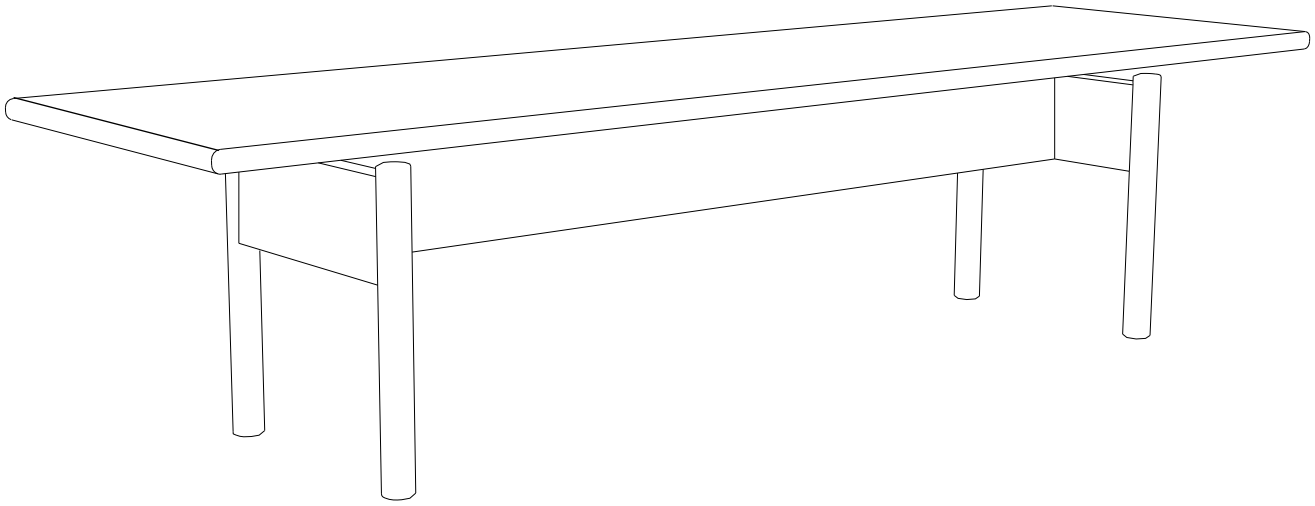

#myhubsch @hubschinterior

Hübsch

DANISH HOME INTERIOR & DESIGN